Customer Support:
Email: support@mindwaretech.com
Phone: (888) 765-9735

MindWare TECHNOLOGIES LTD.
WWW.MINDWARETECH.COM

MindWare Mobile
Recorder

Product Manual

Manual

Customer Support:
Email: support@mindwaretech.com
Phone: (614) 626-4888
US Toll Free: (888) 765-9735
Fax: (614) 626-4915

MindWare TECHNOLOGIES LTD.
WWW.MINDWARETECH.COM

Safety

Warning Regarding medical and clinical use of MindWare Technologies LTD products

MindWare Technologies LTD products are not designed with components and testing for a level of reliability suitable for use in treatment and diagnosis of humans or as critical components in any life support systems whose failure to perform can reasonably be expected to cause significant injury to a human. Applications of MindWare Technologies LTD products involving medical or clinical treatment can create a potential for death or bodily injury caused by product failure, or by errors on the part of the user or application designer. Any use or application of MindWare Technologies LTD products for or involving medical or clinical treatment must be performed by properly trained and qualified medical personnel, and all traditional medical safeguards, equipment, and procedures that are appropriate in the particular situation to prevent serious injury or death should always continue to be used when MindWare Technologies LTD products are being used. MindWare Technologies LTD products are NOT intended to be a substitute for any form of established process, procedure, or equipment used to monitor or safeguard human health and safety in medical or clinical treatment.

MindWare Technologies LTD.
1020F Taylor Station Rd.
Gahanna, OH 43230

Table of Contents

Customer Support:
Email: support@mindwaretech.com
Phone: (614) 626-4888
US Toll Free: (888) 765-9735
Fax: (614) 626-4915

Quick Start

Standalone Physiology Recording

1. Insert an SD Card
2. Attach signal leads to the Mobile Impedance unit
3. Power on with the **Run** ( ) button
4. The main screen summarizes the acquisition settings
    a. See the full Local Mode documentation for details on the summary
5. Press A to enter Pre-Acquisition
    a. Use the left and right arrows to verify signals
6. Press **B** to start acquisition
    a. Acquisition time will update in 5-second increments
    b. Do not remove the SD card when the lock ( ) is displayed
7. Hold the **left and right** arrows to unlock the acquisition and press **A** to exit acquisition
8. Press **B** to open the menu and select **Power Off** to turn off unit

MindWare Technologies LTD.
1020F Taylor Station Rd.
Gahanna, OH 43230

Introduction

Congratulations on your purchase of a MindWare Mobile Recorder unit. The device you hold in your hand is the result of many years of development in physiology recording. We hope you will find new and innovative ways to utilize Mobile physiology collection. This manual covers the preparation, configuration, and use of the unit. There are sections throughout the text that are unique to the unit's specific operation modes, as well as important points, usage tips, and safety warnings. These sections are indicated by the following symbols:


Important

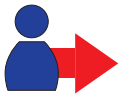
Usage Tip


Warning

Operating

The MindWare Mobile Recorder is for independent, portable data collection to an SD card. All 8 channels can be collected at 500 samples/second.

Customer Support:
Email: support@mindwaretech.com
Phone: (614) 626-4888
US Toll Free: (888) 765-9735
Fax: (614) 626-4915

Device Overview

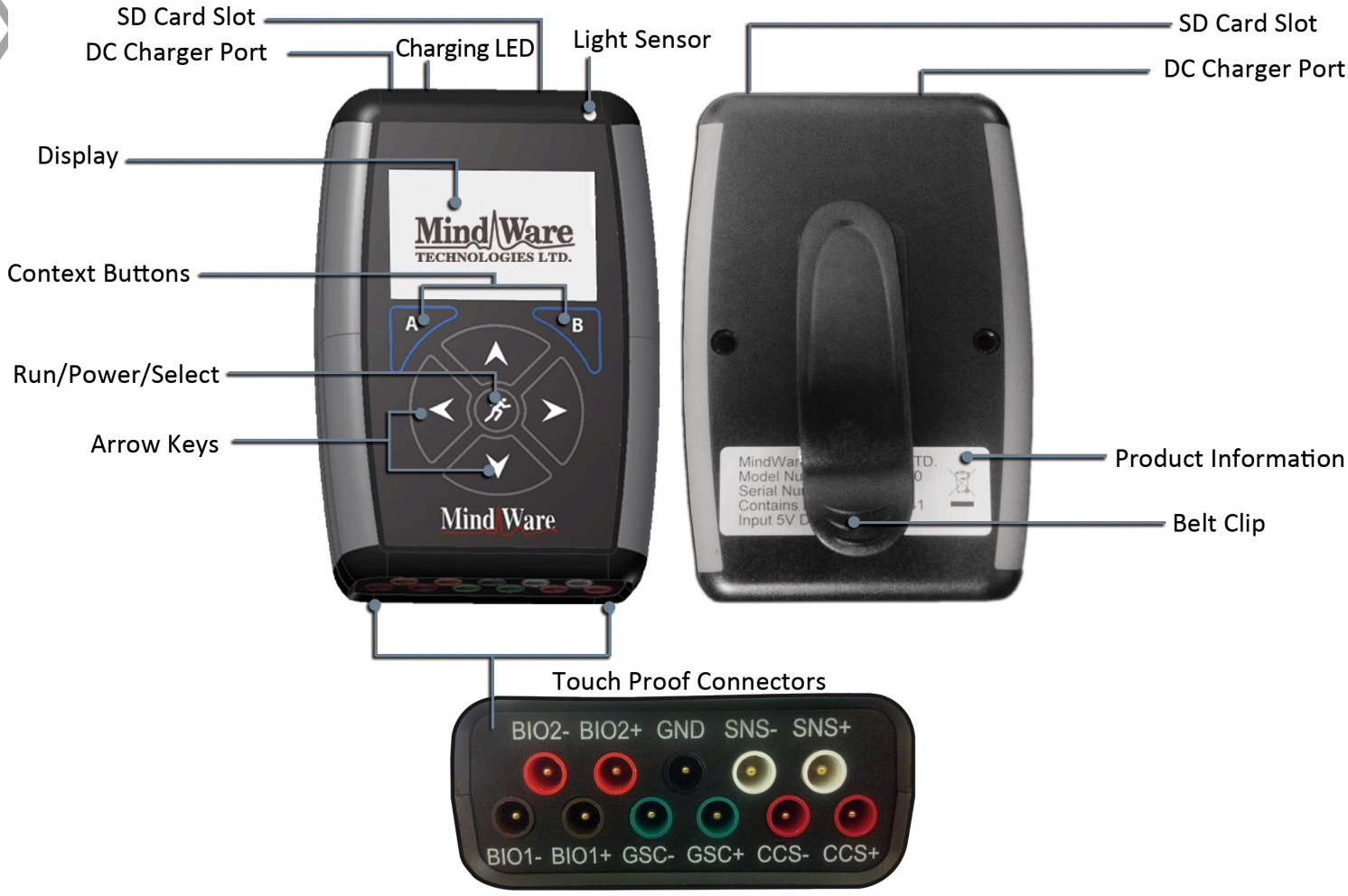

DC Charger Port and Charging LED

The DC Charger Port interfaces with the supplied medical-grade DC power supply. It is safety-isolated to allow charging the unit while it is in use.

⚠ To ensure safety, use only the provided medical-grade power supply

The charging LED turns on when the power supply is connected and the battery is charging. It turns off when the battery is charged or power is lost. The LED blinks if the temperature is too high, too low, or battery needs to be replaced.

MindWare Technologies LTD.
1020F Taylor Station Rd.
Gahanna, OH 43230

When the battery is low, the unit will beep every 10 seconds. This stops when charging starts or after two minutes, when the unit stops any acquisition and turns off.

SD Card Slot

The Mobile accepts full sized SD and SDHC cards in the SD card slot. It is designed such that the SD card is flush with the case when inserted to prevent accidental removal during acquisition. The depression in the middle of the slot allows the card to be inserted or removed by pushing with a fingernail, pencil eraser, or other blunt object.

We recommend using SDHC cards for their increased performance.

Display and Light Sensor

In the interest of increasing battery life, the Mobile uses a low-power LCD screen with the ambient light sensor to limit the backlight intensity during use. Any key press will wake up the backlight for a short period of time.

Keypad

The keypad consists of two context buttons (**A and B**), four arrow buttons, and a **Run** ( ) button. The arrow buttons are used for navigation and unlocking the unit during acquisition. The button is the power button for the unit and also functions as an OK or Select button, depending on what is on the screen. The context buttons change function depending on text on the screen above them, or they act as event buttons during acquisition. In many situations, the button duplicates the functionality of context button **B**.

Use the context buttons during acquisition to mark events.

Customer Support:
Email: support@mindwaretech.com
Phone: (614) 626-4888
US Toll Free: (888) 765-9735
Fax: (614) 626-4915

Input Channels

The input channels are 1.5mm safety jacks that accept the supplied leads and connect to electrodes on the subject. For ease of identification, the following are the inputs broken down by names and colors:

Signal Label	Color	Channel Name	Typical Use
BIO 1	Brown	Bio 1	EKG, EMG, Respiration, HRV
BIO 2	Orange	Bio 2	EKG, EMG, Respiration, HRV
CCS	Red	Z_0 and dZ/dt	Cardiac Impedance
SNS	White	Z_0 and dZ/dt	Cardiac Impedance
GSC	Green	GSC	GSC, GSR, EDA
GND	Black	None	Ground

EKG, EMG, EOG, Respiration, and Other General Voltage Signals

BIO1 and BIO2 are differential, DC-coupled voltage input channels with the following gains and associated ranges and resolutions:

Gain	Range (V)	Resolution (nV)
1X	+/- 2.4	286
2X	+/- 1.2	143
3X	+/- 0.8	95.4
4X	+/- 0.6	71.5
6X	+/- 0.4	47.7
8X	+/- 0.3	35.8
12X	+/- 0.2	23.8

MindWare Technologies LTD.
1020F Taylor Station Rd.
Gahanna, OH 43230

EKG, EMG, and EOG are measured directly using electrodes in various configurations while respiration is measured with a sensor such as a piezoelectric respiration belt. Various other sensors and devices with voltage outputs can be interfaced to these channels as long as they are independently powered or produce their own voltage, such as piezoelectric sensors.

Using the previous table, choose a gain with one range larger than the expected limits of the signal being recorded to accommodate any variation in the signal. When in doubt, run various test subjects at the highest range (lowest gain) and adjust based on the range of data observed.

Individual channel ranges will vary slightly from unit-to-unit but the calibration of each unit will correct for this variation to record accurate data.

Never connect other equipment to any of the Mobile inputs unless the output of the equipment is also isolated for the safety of the subject. Safety isolated inputs on other equipment does not guarantee that the outputs are also isolated.

Cardiac Impedance

The Constant Current Source (CCS) and Sense (SNS) signals make up the cardiac impedance measurement. The CCS lines are a constant current source at 500uA, 100kHz and the SNS lines measure the magnitude of the resulting 100kHz signal received, which is recorded as the Z_0 channel. A derivative of this signal is performed in hardware and recorded in the dZ/dt channel.

The dZ/dt channel is recorded as an inverted derivative to match the convential representation of the signal.

Customer Support:
Email: support@mindwaretech.com
Phone: (614) 626-4888
US Toll Free: (888) 765-9735
Fax: (614) 626-4915

Galvanic Skin Conductance

The Galvanic Skin Conductance channel (GSC) is used to measure electrodermal activity (EDA). It measures conductance by placing 0.5V between the electrodes and measuring the resulting current flow to derive the conductance. It is the only channel that does not need a ground connection.

Ground

The ground (GND) connection is intended to keep the Mobile unit and the subject at approximately the same DC potential to keep the signals within the input range of the device (+/- 2.4V). The ground line needs to be attached to the subject at a location with a minimum of muscle and possible movement.

Activity

There are three accelerometer channels, X, Y and Z, which are internal to the Mobile unit. These can be used to assess activity levels, identify motion as the source of noise in the other channels, and can estimate the posture of the subject.

MindWare Technologies LTD.
1020F Taylor Station Rd.
Gahanna, OH 43230

Preparation

Proper planning will make your Mobile experience go smoothly. Before an acquisition, fully charge the Mobile unit, check for dry or expired electrodes, and check for broken leads.

Charging


Charging


Charge Complete

To charge the unit, plug the supplied charger into an outlet and into the Mobile. A Green light by the charging port will illuminate while the unit is charging. A full charge will take approximately four hours from a low battery state. If the unit has been unused for a long time, it may need to charge for an extended period before turning on. In this case, the clock may need to be reset. See the section on Setting the Clock for instructions.

- While the unit is off and charging, a battery is displayed on the screen with:
  - A lightning bolt and charge percentage during charging
  - A checkmark when fully charged
- When the unit is powered on, most screens display a battery charge indicator in the top left corner
- The battery charge level indicator and percentage are only an approximation of the charge of the battery. The unit begins beeping when the battery is low, then stops acquisition after two minutes to preserve data before shutting down.
- International plug kits are available for the charger. Contact a sales representative to order one.

Note: The battery will continue to trickle charge even after the charge light goes out and the unit indicates that it is charged. To maximize your runtime, allow the unit to continue to charge in this state for a few hours before disconnecting.

Customer Support:
Email: support@mindwaretech.com
Phone: (614) 626-4888
US Toll Free: (888) 765-9735
Fax: (614) 626-4915

Lead Wires

Unfortunately, durable leads are uncomfortable to wear and comfortable leads are fragile. The leads supplied with your Mobile unit are designed with a balance of durability and comfort. When treated well, they can last a long time:

- Never bend the leads sharply, especially near the connectors at either end.
- Always tape the leads to the subject with a strain relief loop near the electrode.

- Insert and remove leads from the Mobile by grasping the hard body of the connector and not the flexible region or wire.

Initialization

To power on the Mobile unit, press the button. The boot procedure takes a moment and then you are presented with the home screen.

MindWare Technologies LTD.
1020F Taylor Station Rd.
Gahanna, OH 43230

Acquisition

Configuration

On power-up or when finishing a acquisition, you are presented with the home screen, as seen below.

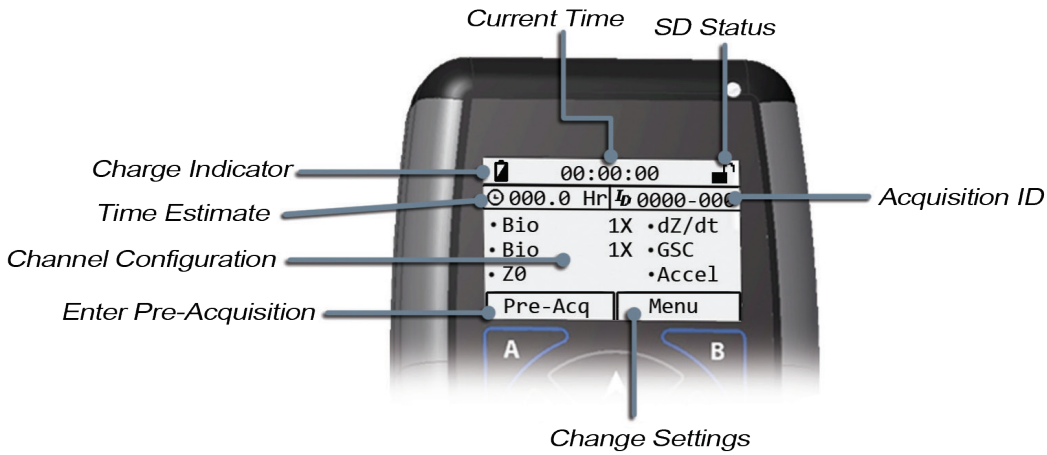

This screen is a summary of relevant information on the acquisition configuration. It is intended to allow you to quickly review the configuration to verify setup before proceeding. The following is a rundown of the key elements.

Charge Indicator

The charge indicator displays the approximate charge level of the battery. It is an estimate and not a substitute for fully charging the unit before every acquisition.

Current Time

This shows the current time. This clock is used to timestamp every acquisition and can be used for a rough synchronization of multiple units working in local mode.

SD Card Status

The icon in this location indicates the status of the SD card. A closed padlock symbol 🔒 means that the SD card is being accessed. Do not remove the SD card when this symbol is displayed. An open padlock 🔓 indicates that it is safe to remove the SD card. During configuration, the SD card is

Customer Support:
Email: support@mindwaretech.com
Phone: (614) 626-4888
US Toll Free: (888) 765-9735
Fax: (614) 626-4915

only locked when starting or immediately after an SD card is inserted.
The **X** symbol means that there is no card inserted or there is a problem with the inserted card. See the troubleshooting section for information on addressing SD card issues.

Time Estimate
When an SD card is inserted and initialized, the unit displays an estimate of the recording time available on that card. This is a worst-case estimate based on all channels enabled and some overhead for events.

Any single acquisition is limited to 4GB by the file system (FAT32) on the SD cards, which corresponds to approximately 48 hours of data collection with all channels enabled. The unit will not last that long without charging during the acquisition.

Acquisition ID
The Acquisition ID corresponds to the filename of the next acquisition. It is intended to allow an identification of the study or subject through the first four characters and the acquisition count in the last three digits. The acquisition count will automatically increment to the next number after each acquisition. Both of the fields can be changed through the menu.

Channel Configurations
This area summarizes the status of all of the channels. To the left of each channel name is a filled circle ● indicating an enabled channel or an empty circle ○ indicating a disabled channel. The two Bio channels have gain settings to the right of their names. Note that the gain values are simply indicators of the channel settings and you need to consult the range table in the specifications section (Page 10) to understand what those gains mean in terms of resolution and range.

Pre-Acq
Context button A ends configuration and enters pre-acquisition mode, detailed in the next section.

Menu
Context button B enters the main menu.

MindWare Technologies LTD.
1020F Taylor Station Rd.
Gahanna, OH 43230

Configuration Menu Map:

- **Acq Settings** – These are settings specific to acquisition
  - **Acquisition ID** - This is the filename to use for the next acquisition. The first four characters are intended to identify your study or subject and the last three numbers automatically increment for each acquisition.
  - **CH1-Bio**
    - -On/Off
    - -Gain & Range
  - **CH2-Bio**
    - -On/Off
    - -Gain & Range
  - **CH3-Z0**
    - -On/Off
  - **CH4-dZ/dt**
    - -On/Off
  - **CH5-GSC**
    - -On/Off
  - **Accelerometer** – This controls all three axes of the accelerometer
    - -On/Off
- **System Settings** – These are unit-level settings
  - Date & Time
  - About
- **Power Off** – Power off the unit

Customer Support:
Email: support@mindwaretech.com
Phone: (614) 626-4888
US Toll Free: (888) 765-9735
Fax: (614) 626-4915

Pre-Acquisition

The purpose of the pre-acquisition state is to allow you to preview the signal morphology to verify that electrodes are placed properly and hooked up correctly. The **Left and Right** buttons allow you to cycle through each of the enabled channels. After verifying signals, Context Button **B** will start the acquisition or Context Button **A** will return to configuration.

Due to the data processing and frequent screen updates, the Pre-Acquisition state drains the battery faster than either Configuration or Acquisition. So, it is advantageous to return to the Configuration state after verifying signals if the acquisition is not starting soon.

Acquisition

In this state, data is being recorded to the SD card. The SD card is locked the entire time and should not be removed until acquisition is ended. Context Button **A** and Context Button **B** are configured to record events when pressed.

Do not be alarmed if it appears that the timer is not counting up. It is designed to only update every 5 seconds to maximize runtime.

Unlocking Acquisition

Acquisition is unlocked by holding the **left and right** arrow buttons at the same time. This puts the acquisition into a mode similar to pre-acquisition where signals can be viewed. Use the **left and right** arrows to cycle through the different signals. This is useful for checking on electrodes between phases of a study.

The acquisition will stay unlocked for 10 seconds after any key press and then automatically return to the locked state. No events can be recorded while unlocked.

MindWare Technologies LTD.
1020F Taylor Station Rd.
Gahanna, OH 43230

Ending Acquisition

To end acquisition, first unlock the acquisition, and then press Context Button A to end it. The Mobile then returns to the configuration state.

Note that the Mobile stores data in only the raw MWX format. All of the MindWare applications need an index created (an MWI file) before it can be opened. The MWI builder is in the Tools menu of most applications.

Customer Support:
Email: support@mindwaretech.com
Phone: (614) 626-4888
US Toll Free: (888) 765-9735
Fax: (614) 626-4915

Setting the Clock

The clock is set by selecting the Date & Time entry in the System Settings menu in either Local or Wifi Mode. Navigate between the time and date fields with the Left and Right Arrows and use the Up and Down arrows to change the entries. The selection for 12Hr or 24Hr mode is done in the fourth field by choosing the appropriate entry from AM, PM, or 24Hr.

The new time and date is not saved until the Save button is selected, so to acheive the best accuracy, set the fields for a time a few seconds in the future and press Save at that time.

Firmware Updates

MindWare periodically releases firmware updates for the Mobile to address issues, improve performance, and add features. Apply updates with the following procedure:

1. Place the firmware update file on an SD card using a computer
2. Insert the SD card in to the Mobile and attach the charger
3. Power on the Mobile using the button
4. While the MindWare logo is scrolling on the screen, press and hold both the left and right arrow buttons
5. Select the new firmware file from the list
6. Wait while the unit verifies the file
7. When it is finished, select Update at the prompt to continue
8. Wait while the update is performed. It will take a few minutes and may not indicate any progress on the screen
9. The update is finished when the Mobile beeps and then reboots with the new firmware

MindWare Technologies LTD.
1020F Taylor Station Rd.
Gahanna, OH 43230

Troubleshooting

Help! My SD Card is not working!

- Verify that the SD card is fully inserted in to the unit
    - The card should be flush with the case when fully inserted.
- You may have accidentally removed the SD card while data was being written. Use a computer to run a disk check to repair any corruption
    - Check the lock status before removing the SD card and only remove if the display shows an open lock
    - The card is only locked for a brief time after it is initially inserted, at the start of pre-acquisition, and during acquisition.
- Verify that a computer can write a file to the SD card and a different computer can read it back
    - SD cards can become damaged through misuse or premature failure
    - Replace failed cards with only SDHC cards

I am having trouble inserting or removing my SD Card.

- The SD Card slot is designed to minimize accidental removal during an acquisition
    - Use the eraser end of a pencil or another blunt object in the slot indentation to insert or eject the card
- Remove any extra labels or stickers added to the SD card as these can interfere with insertion or removal

My Mobile is beeping at me!

- Check the battery level
    - Short beeps approximately 10 seconds apart mean that the battery is low and the unit will stop acquisition and power down soon
    - Connect a charger to continue acquisition
- Constant beeping while the charger is attached can indicate a broken charger or damaged Mobile
    - Contact customer support

Customer Support:
Email: support@mindwaretech.com
Phone: (614) 626-4888
US Toll Free: (888) 765-9735
Fax: (614) 626-4915

The green charging light is blinking

- The battery is too warm to safely charge
    - The unit has paused charging until it has cooled down enough to continue

The charge light will not turn on

- The Mobile unit may be fully charged
    - The light only illuminates during charging
- Verify that the charger is plugged in and the outlet is powered
- The charger or Mobile may be damaged
    - Contact customer support

My Mobile will not turn on

- The battery may be low or deeply discharged
    - Connect the charger overnight
        - If the battery becomes deeply discharged, the unit will slowly charge to prevent damage to the battery. Once it has reached enough charge to power on, the normal charging screen will display and it will reach a full charge in approximately four hours from that point
- The unit may be powered on but unresponsive with a blank screen
    - Remove the charger and hold the Run Button () for 12 seconds to force the unit to shut down
    - Attach the charger and the unit should display the charging screen

My concern is not listed here

- Contact customer support for assistance.

MindWare Technologies LTD.
1020F Taylor Station Rd.
Gahanna, OH 43230

Cleaning Instructions and Operating Environment

To clean the Mobile:

1. Disconnect the charger and subject leads

2. Power off the Mobile and remove the SD card

3. Use a damp, soft cloth to remove any dirt, adding a small amount of mild detergent if necessary

4. Allow the Mobile to dry thoroughly before powering on or connecting any wires

Do not use abrasive cloths, such as paper towels, to clean the Mobile, as these may leave small scratches on the screen. Additionally, do not immerse the Mobile or spray it directly with cleaning solutions. If liquids do penetrate the device, remove from service and contact MindWare support for repair.

Recommendations:

A. Recommended for Indoor use Only

B. Maximum altitude of 2,000 m

C. Temperature range of 5˚C to 40˚C

D. Maximum RH of 80%

E. Overvoltage Category I

Support Contact Information

Web:	www.mindwaretech.com
Email:	support@mindwaretech.com
Fax:	(614) 626 - 4915
Phone:	(614) 626 - 4888
Toll Free:	(888) 765 - 9735

MindWare
TECHNOLOGIES LTD.
WWW.MINDWARETECH.COM
1020-F Taylor Station Road
Gahanna, OH 43230
(614) 626- 4888

MindWare Technologies LTD.
1020F Taylor Station Rd.
Gahanna, OH 43230

Specifications

General

Sample Rate	500 S/s
Analog Channels	Bio 1, Bio 2, Z_0, dZ/dt, GSC
Accelerometer Channels	X, Y, Z
Resolution	24-bit Analog, 16-bit Accelerometer
Battery	1750 mAh
Isolation	3kV
Lead Connectors	1.5mm TouchProof safety connectors
Height	4.62 in
Width	3.11 in
Depth	1.3 in + 0.56 in belt clip
Weight	8.4 oz

Local Mode

Storage	SDHC card
Channels	Up to 8
Battery Life	24 hrs

Customer Support:
Email: support@mindwaretech.com
Phone: (614) 626-4888
US Toll Free: (888) 765-9735
Fax: (614) 626-4915

Bio 1 & Bio 2

Applications	ECG, EMG, EOG, piezo respiration sensors, signal recording from other instruments
Configuration	DC-Coupled, Bipolar, Differential
Filtering	Low-pass at 150kHz
Range	+/- 2.4V (1x) +/- 1.2V (2x) +/- 0.8V (3x) +/- 0.6V (4x) +/- 0.4V (6x) +/- 0.3V (8x) +/- 0.2V (12x)

Z_0 & dZ/dt

Applications	Cardiac impedance measurement (ZCG, ICG)
Range	0.1 - 30 ohms, +/- 2.4 ohms/s
Current Source	500uA @ 100kHz

GSC

Applications	Skin conductance measurement (GSC, EDA)
Range	0.5 - 100uS

Accelerometer (X,Y,Z)

Applications	Activity Monitoring, Position Monitoring
Range	+/- 8G

MindWare Technologies LTD.
1020F Taylor Station Rd.
Gahanna, OH 43230

Important Information

FCC STATEMENT

This device complies with Part 15 of the FCC Rules. Operation is subject to the following two conditions:

1. This device may not cause harmful interference, and
2. this device must accept any interference received, including interference that may cause undesired operation.

Any changes or modifications NOT explicitly APPROVED by MindWare Technologies could cause the module to cease to comply with FCC rules part 15, and thus void the user's authority to operate the equipment.

IC COMPLIANCE

This device complies with Industry Canada licence-exempt RSS standard(s). Operation is subject to the following two conditions:

1. This device may not cause interference, and
2. this device must accept any interference, including interference that may cause undesired operation of the device.

CONFORMITÉ AUX NORMES D'IC

Cet appareil est conforme à la(aux) norme(s) RSS sans licence d'Industry Canada. Son utilisation est soumise aux deux conditions suivantes :

1. Cet appareil ne doit pas causer d'interférences et
2. il doit accepter toutes interférences reçues, y compris celles susceptibles d'avoir des effets indésirables sur son fonctionnement.

CE 0981 ⓘ

Made in USA

Manual

MindWare TECHNOLOGIES LTD.

WWW.MINDWARETECH.COM

Customer Support:
Email: support@mindwaretech.com
Phone: (888) 765-9735